NEW & RENEWABLE
ENERGY PROGRAMME

HYDROPAK:

Concept design and analysis of a packaged crossflow turbine

Client: *Department of Trade and Industry - New & Renewable Energy Programme.*

Partners: *IT Power, UK**;** Newmills Hydro Turbines (NHT) Engineering.*

In the traditional planning of hydropower developments, turbines have to be customized to meet the needs of each site. But the market is changing, requiring smaller capacities, high load factor installations and a demand for cost-effective, rather than optimally efficient turbines. The Hydropak concept of a packaged turbine has emerged to meet this changing nature of the market for mini-hydro turbines in Europe and overseas.

The principal aim of this project, running until April 2004, is to complete the conceptual design and economic optimisations of a modular standardised crossflow turbine, in the range 25-500kW at 6-50m head. The work involves developing a basic layout the turbine delivered as an all-in-one packaged product based on use of off-the-shelf components. The principle components are being designed to achieve standardisation and the civil works implications are being analysed with the aim of minimising the on-site works required for installing Hydropak. Cost estimates will be made with the overall target as a suite of turbines offered at ex-factory costs of £500-£600 per kW.

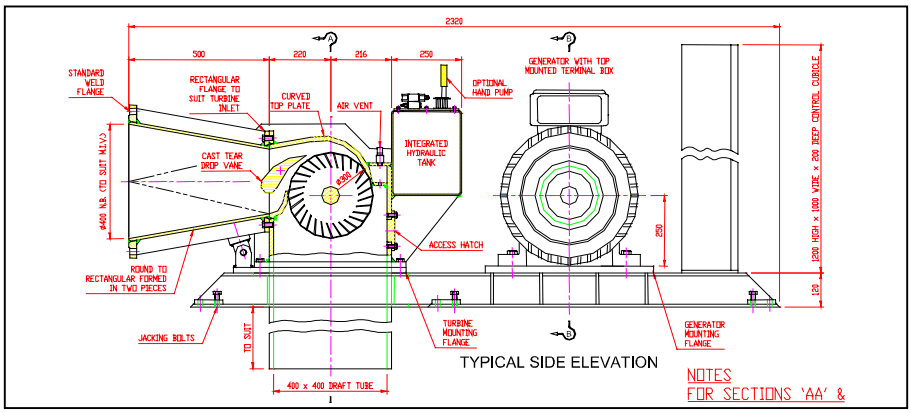

The UK industry does not currently offer a crossflow turbine product and recent UK projects have imported crossflow turbines from Eastern Europe rather than use more efficient, but more expensive, Francis turbines available in the UK. This project is therefore an important step towards enabling a major UK manufacturer adapt its design approach to meet changing market demands and thwart the growing competition from cheap imports.

For further information please contact: Simon Taylor, IT Power, The Manor House, Lutyens Close, Basingstoke, Hampshire, RG24 8AG, UK. Email: simon.taylor@itpower.co.uk; Tel: +44 (0) 1256 392700.